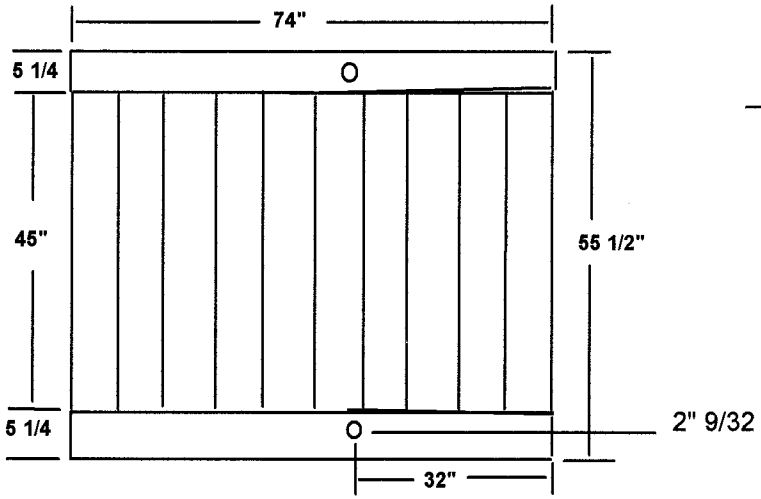
74"
5 1/4
45"
55 1/2"
5 1/4
2" 9/32
32"

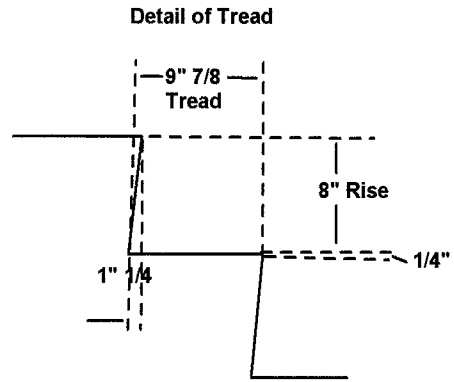
Detail of Tread
9" 7/8
Tread
8" Rise
1/4"
1" 1/4

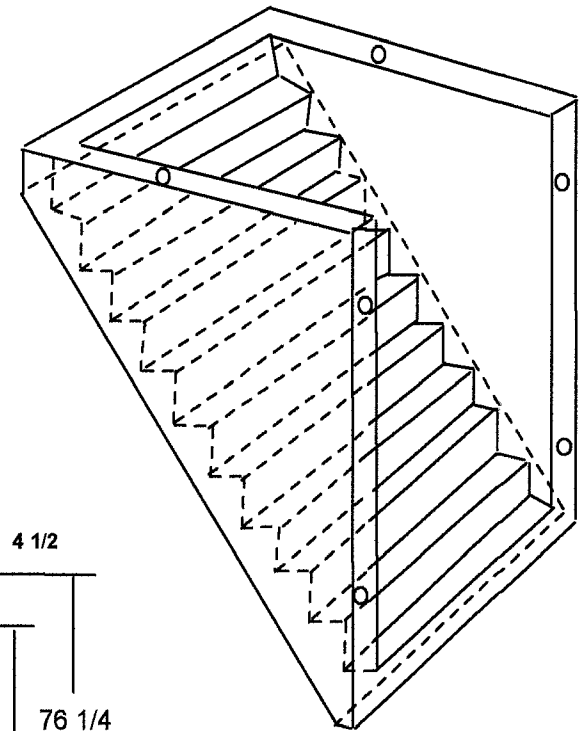

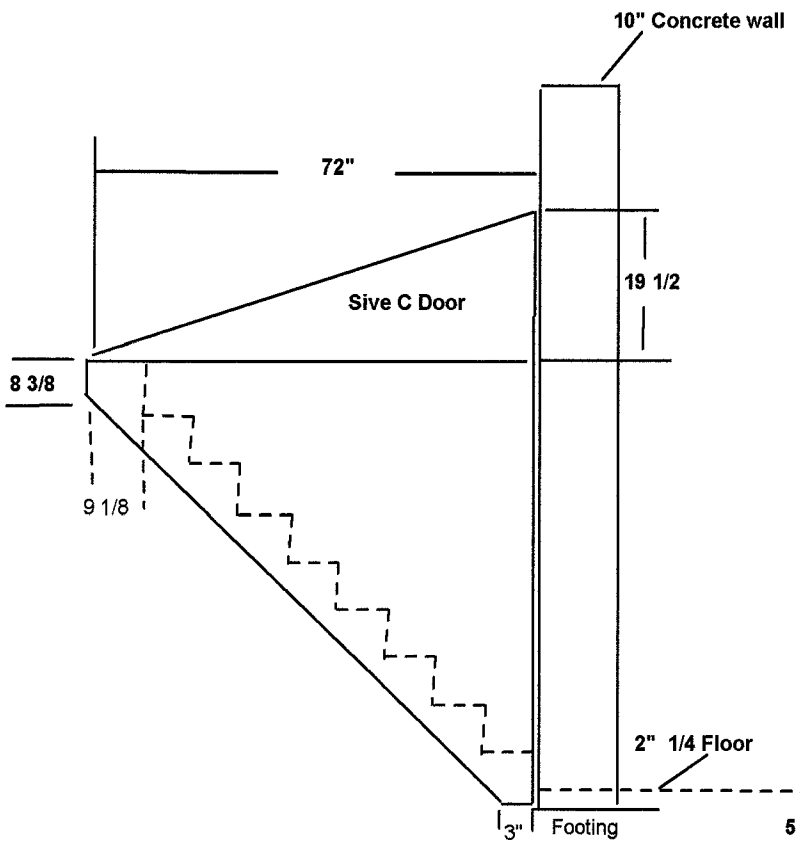
10" Concrete wall
72"
19 1/2
Sive C Door
8 3/8
9 1/8
2" 1/4 Floor
3"
Footing

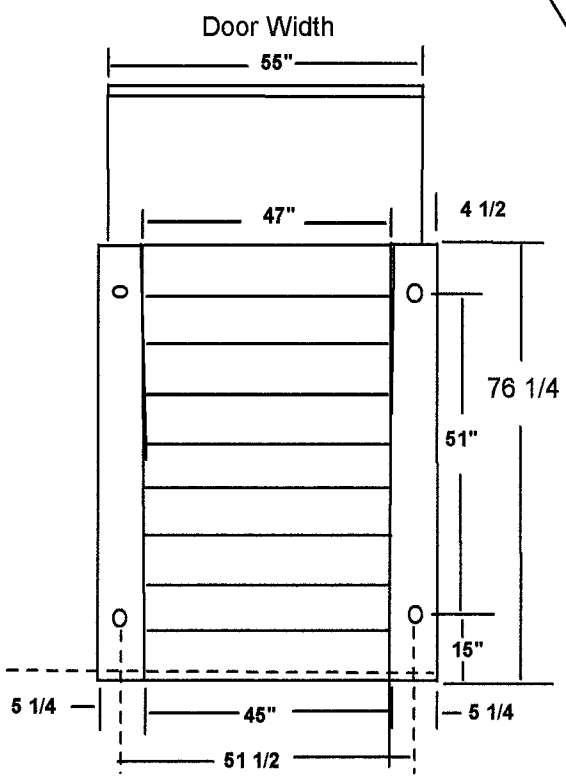
Door Width
55"
47"
4 1/2
76 1/4
51"
15"
5 1/4
45"
5 1/4
51 1/2