Atlas Concrete Product 1-800-774-1112

E- Casting and Door

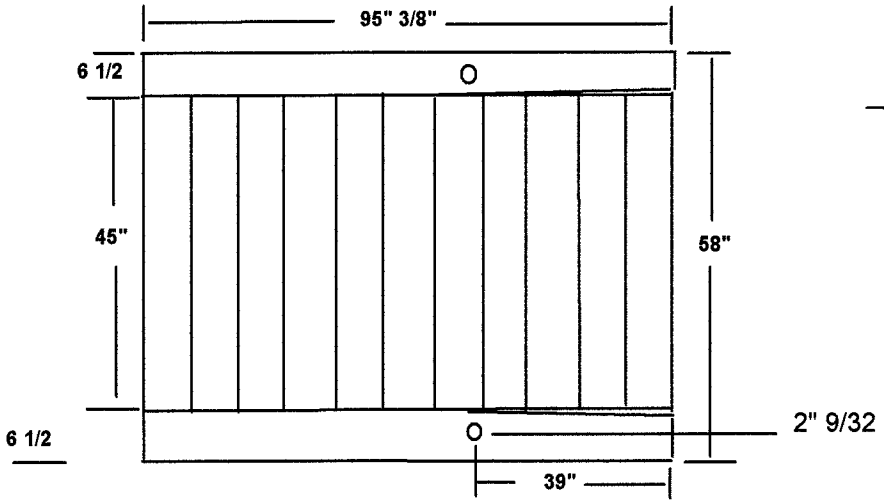

Detail of Tread

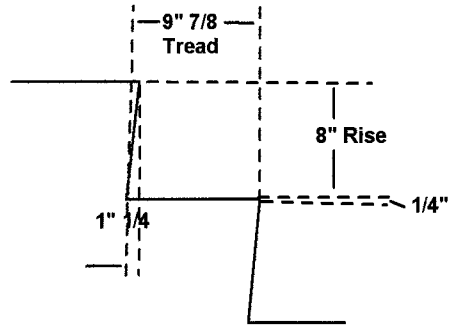

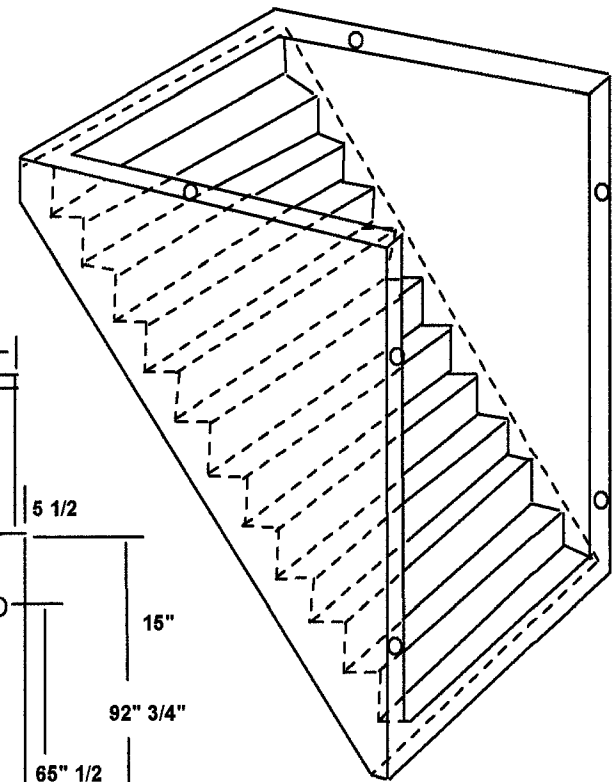

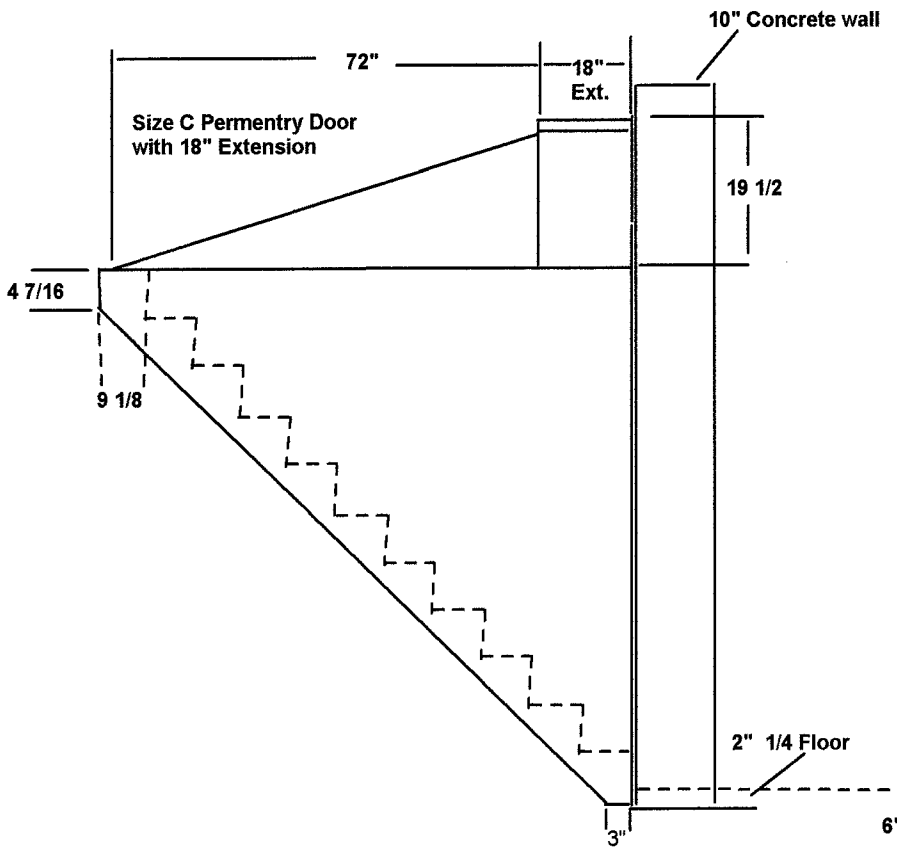
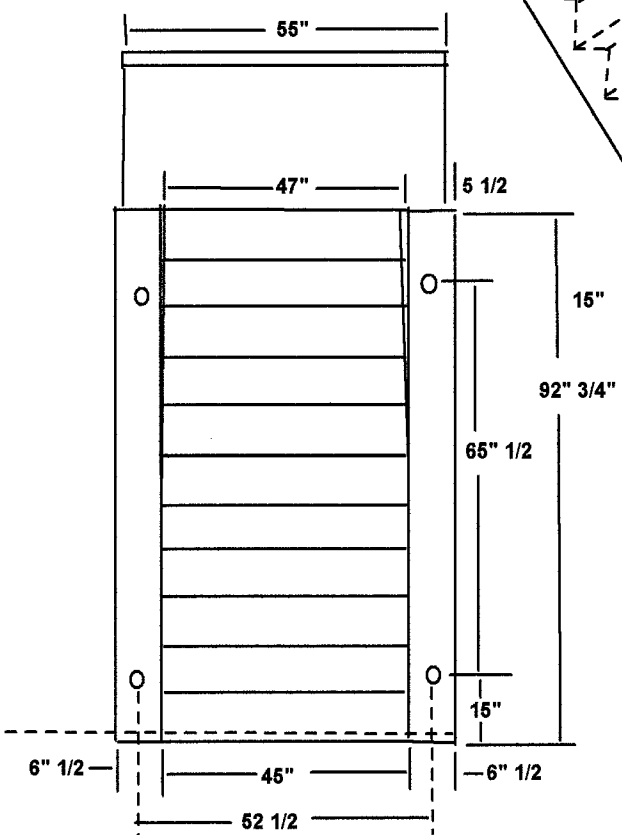
Door Width