Atlas Concrete Products
1-800-774-1112

P-13
Electrial Transformer Pad 3 Phase
75 - 300 KVA

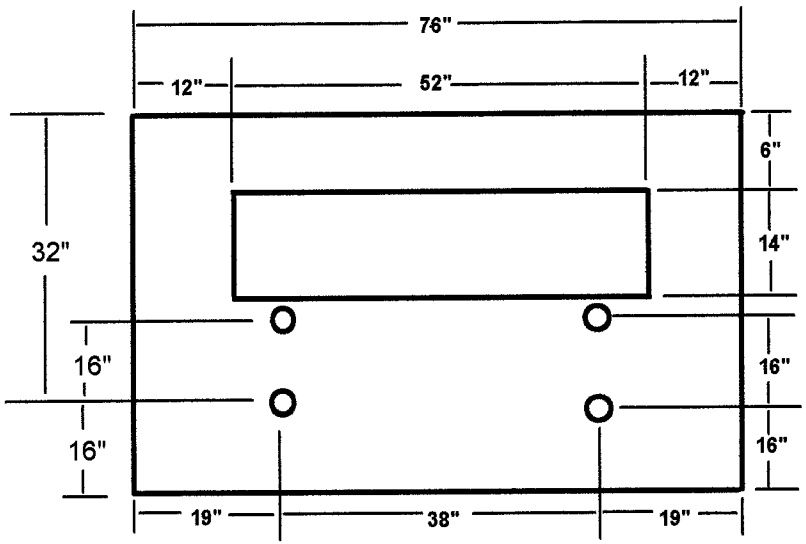

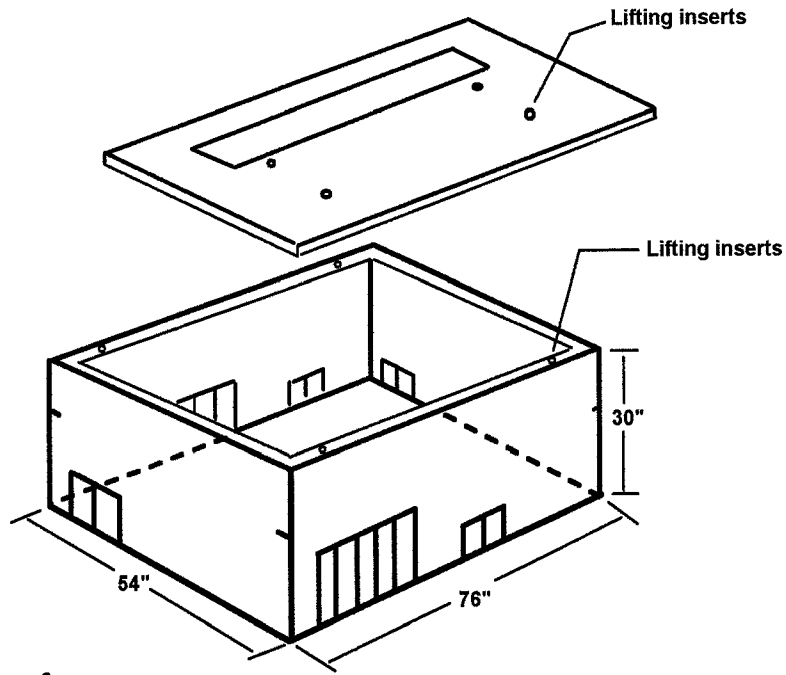

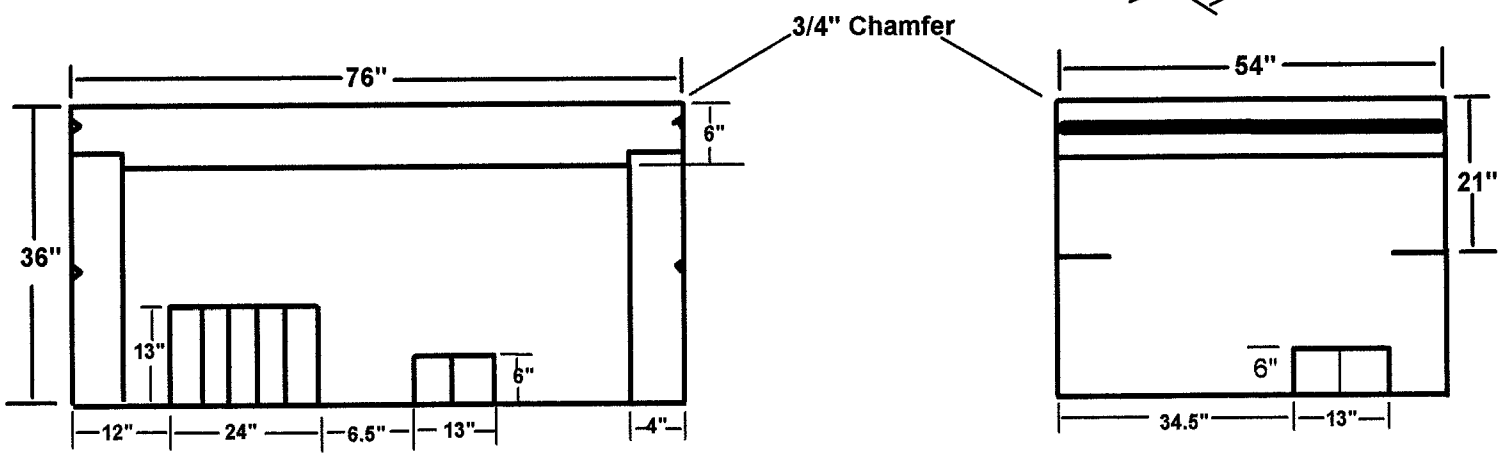

Notes
Concrete Compressive Strength 4,000 PSI @ 28 Dayes
Meets all Provisions of Northeast Utilities Service Company DWG. NO.P-15

Weight: Cover 1,6411 Lbs Box 2,371 Lbs